CONTROLS INTEGRATION REQUIREMENTS

MES

MANUFACTURING EXECUTION SYSTEM

SYSTEM VERSION: 1.0

DOCUMENT REVISION: 1.3

1 Revision History

This section records the change history of this document.

Name	Date	Reason For Changes	Version
Eugene Maltsev	08/01/10	Initial draft	0.1
Eugene Maltsev	08/04/10	Updated per reviews	1.0
Eric Renner	01/19/11	Updated Data Elements. Added Appendices heading. Formatted message elements into grids.	1.1
Eugene Maltsev	01/19/11	Add MES.Call and MES.Trig interfaces	1.2
Eugene Maltsev	02/22/11	Add .ReasonCode to MES.Stat	1.2a
Eugene Maltsev	03/10/11	Add 8.1 MES.Stat example	1.3

2 Table of Contents

1 Revision History 2
2 Table of Contents 3
3 Table of Figures 3
4 Scope 4
5 Overview of controls communication architecture 4
6 Controls interfaces 5
6.1 Machine Status format and functionality 5
6.2 Production data format 6
6.3 Product Optional data 7
6.4 Machine schedule 8
6.5 Machine time synchronization 9
6.6 Machine Calls 9
6.7 MES Trigger 10
7 Glossary of Terms and acronyms 10
8 Appendices 11
8.1 MES Controls Integration simulation example with RSLogix 5000 for MES.Stat interface 11

3 Table of Figures

Figure 1, Controls communication architecture 5
Figure 2 - MES.Stat data structure 11
Figure 3 - MES.Stat Simulation program 11

4 Scope

This document describes integration of Tesla MES system with controls equipment such as Machines and Conveyors and intended to provide base requirements for Machine and Conveyor equipment manufacturers.

The purpose of this document is to outline controls integration requirements for quotation purposes. Tesla MES application is under development and content of this document may be revised as we progress. Please obtain latest version prior your system development and implementation.

5 Overview of controls communication architecture

Main purpose of MES machine integration with controls equipment is to:

- Orchestrate manufacturing production sequence
- Collect and present machine/conveyors performance data
- Collect and track quality status for each product
- Provide build data information to machines and conveyors.

In order to get data in time synchronized manner PLC clock must be synchronized with OPC sever clock.

MES communications to controls devices based on requirements of APRiSO FlexNet architecture. FlexNet provides integration with controls equipment such as PLC's through the OPC server. FlexNet Machine integrator FN-MI is located on the same server to provide connection to FlexNet Database, see Figure 1 below.

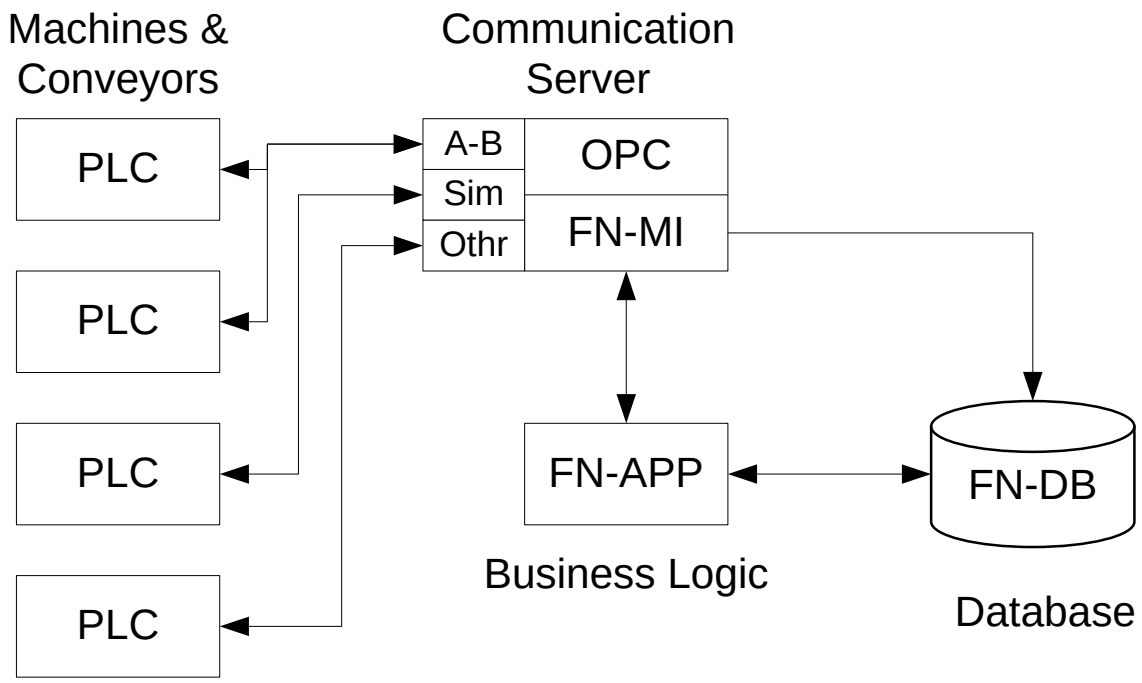

Figure 1, Controls communication architecture

FN-MI supports many different OPC servers such as Matrikon, Kepware, Wonderware, etc. OPC server has native drivers to connect to many different PLCs, like Allen-Bradley, Siemens, Mitsubishi, etc.

6 Controls interfaces

Specific implementation of the controls interfaces depends on type of controls equipment specifically Programmable Logical Controller (PLC) brand. Tesla Controls specification outlines recommended brands and types of controls equipment.

This document outlines method of communications. Interpretation of machine states, faults, quality parameters and defects depends on specifics of the process and machine functionality.

The following controls interfaces are required by MES.

6.1 Machine Status format and functionality

MES will collect Machine status data base on outlined below controls communication interface.

Structured data should be created in the PLC with following format:

Tag name: ***MES.Stat*** – Machine status

Elements:

ELEMENT	DESCRIPTION	DATA TYPE
.MID	Machine/Station ID FlexNet Equipment Name	Nvarchar(80)
.Status	Machine status (1-Indirect, 2-Job Direct, 3-Job Downtime, 4-Job Setup, 5-Job Teardown, 6-Planned Maintenance)	Int(10,0)
.ReasonCode	Reason Code (Fault, Blocked, Starved, etc)	
.Reason	Reason Classification (Fault, Blocked, Starved, etc)	Nvarchar(20)
.WorkCenter	Work Center	Nvarchar(40)
.Operation	Operation Code (op10, 20, etc)	Nvarchar(20)
.WorkOrder	Work Order (Optional for batches)	Nvarchar(40)
.StartTime	Start of same status/reason (for previous event)	DateTime
.EndTime	End of same status/reason (for previous event)	DateTime
.Speed	Process/Conveyor Speed	Decimal
.PN	Part Number (Material Number)	Nvarchar(40)
.TID	Transaction ID	Int(10,0)
.TDT	Transaction Date Time	DateTime

Functionality:

Machine status interface will provide data for Machine KPI calculation: Downtime, Quality, Performance, Overall Equipment Efficiency (OEE), etc.

Machine could have only one status/reason at any given time. When Status or Reason changed, the Start and End time need to be updated accordingly from PLC clock, and transaction will be initiated in FN-MI to store a record.

Every machine will be assigned specific Work center and Operation. Part ID, Speed and Work Order is optional parameter in case of batch producing machines like press line. Transaction ID is a rolling incremental number. When all data is set in MES.Stat tag TID should be incremented to trigger transaction. Machine will not get any acknowledgement for this transaction.

Notes:

1. Interpretation of Status and Reason fields are machine specific and will be defined during machine development time.
2. In case of machine breakdown, downtime should be related to root fault that caused the machine to go down and this should be reflected in a reason code.

6.2 Production data format

Structured data should be created in the PLC with following format:

Tag name: ***MES.Prod*** – Produce parts

Elements:

ELEMENT	DESCRIPTION	DATA TYPE
.MID	Machine/Station ID FlexNet Equipment Name	Nvarchar(80)
.SeqN	Product sequential Number	Int(10,0)
.VIN	Vehicle Identification Number	Nvarchar(40)
.PN	Part Number	Nvarchar(40)
.LN	Lot/Serial Number	Nvarchar(40)
.Qty	Quantity Produced	Int(10,0)
.Qlty	Quality Character (1-Good, 2-Defect, 3-Scrap, 4-…)	Int(10,0)
.StartTime	Start time of process	DateTime
.EndTime	End time of process	DateTime
.ProcData[100]	Optional Process Data Array of 100	Array of Int(10,0)
.TID	Transaction ID	Int(10,0)
.TDT	Transaction Date Time	DateTime

Functionality:

Production Data interface will capture data related to product including: production time (cycle time), optional Process parameters and defects. Product will be tracked by Serial Number or VIN number or Part Number.

If produced product is controlled by lot or serial number then LN value will be required. Machine will provide Quantity of produced part base on machine requirements. For most machines produced quantity will be 1. Machine will provide quality of produced part if it has

auto quality verification option. Transaction will include start and end process time. Optional process data could be stored in array like scrap reason, defect type, temperature, pressure, etc. Transaction ID is a rolling incremental number.

When all data is set in MES.Prod tag TID should be incremented to trigger transaction. Machine will get acknowledgement for this transaction by reset of TID to 0 if transaction successful. Negative number will reflect transaction failure. Interpretation of negative value will be determined later. Machine should be able to buffer up to 100 transactions and periodically retry to process queued transactions. For critical data machine may be required to stop production when buffer reached its maximum.

Notes:

1. Interpretation of this interface is machine specific and should be further defined during machine development time.

6.3 Product Optional data

Some machine operations will be dependent on specifics of the product that is built. Production will be organized in specific sequence and MES will be controlling this sequence. Machine will be able to request build options via MES interface.

1. **Optional data request**

Structured data should be created in the PLC with following format:

Tag name: ***MES.Req*** – Request Optional data

Elements:

ELEMENT	DESCRIPTION	DATA TYPE
.MID	Machine/Station ID FlexNet Equipment Name	Nvarchar(80)
.SeqN	Product sequential Number	Int(10,0)
.VIN	Vehicle Identification Number	Nvarchar(40)
.Size	Size of returned array (0-Only current, 1-Next SN, 2-… up to 20)	Int(10,0)
.TID	Transaction ID	Int(10,0)
.TDT	Transaction Date Time	DateTime

Functionality:

Machine will submit Sequence or VIN number of the product that is currently in process, and it will request data either only for this product or number of products in the sequence defined by MES. Transaction ID is a rolling incremental number. When all data is set in tag, TID should be incremented to trigger transaction. Machine will not get any acknowledgement for this transaction.

Notes:

1. Interpretation of this interface is machine specific and should be further defined during machine development time.

2. **Optional data response**

Structured data should be created in the PLC with following format:

Tag name: ***MES.Res*** – Respond to Optional data request

Elements:

ELEMENT	DESCRIPTION	DATA TYPE
.MID	Machine/Station ID FlexNet Equipment Name	Nvarchar(80)
.Size	Size of returned array (0-Only current, 1-Next SN, 2-… up to 20)	Int(10,0)
.RSN[21]	Array of returned sequence Serial Numbers up to 21	Array of Int(10,0)
.RVIN[21]	Array of returned sequence VINs up to 21	Array of Nvarchar(40)
.Opt[21]	Array of returned Options in Text format up to 21	Array of Char(1000)
.Err	Error Code (If appropriate)	Int(10,0)
.TID	Transaction ID	Int(10,0)
.TDT	Transaction Date Time	DateTime

Functionality:
MES will respond with Array of sequence or/and VIN numbers and Option data. Transaction ID will be equal to requested TID and Transaction time will be generated by MES. If request failed error code will be set to value not equal 0. Specific values will be defined later.

Notes:
1. Interpretation of this interface is machine specific and should be further defined during machine development time.

6.4 Machine schedule

Some machines will be required to go in power saving mode during non production hours and may be required to warm up to be ready for production. MES will be able to provide production schedule for up to 3 shifts including up to 5 breaks.

Structured data should be created in the PLC with following format:

Tag name: ***MES.Sched*** – Start and End times of Shifts and Breaks with optional text

Elements:

ELEMENT	DESCRIPTION	DATA TYPE
.MID	Machine/Station ID FlexNet Equipment Name	Nvarchar(80)
.ShiftStart[3]	Array of Start Time representing start of shift up to 3	Array of Time
.ShiftEnd[3]	Array of End Time representing end of shift up to 3	Array of Time
.BreakStart[15]	Array of Start Time for breaks up to 15	Array of Time

.BreakEnd[15]	Array of End Time for breaks up to 15	Array of Time
.Opt[10]	Array of returned Options in Text format up to 10	Array of Char(1000)
.TID	Transaction ID	Int(10,0)
.TDT	Transaction Date Time	DateTime

Functionality:

MES will send this transaction to all required PLCs when schedule is updated. PLC will store shift and breaks time and reset TID to "0" and TDT to time when transaction was complete.

Notes:

1. Interpretation of this interface is machine specific and should be further defined during machine development time.

6.5 Machine time synchronization

Machines PLC's will be required to synchronize their clocks with OPC server. Type of interface for Time synchronization will be based on type of PLC.

6.6 Machine Calls

Per controls standard machines HMIs will have capability to call for Maintenance, Quality, Supervisor, etc. Also machine could have predetermined condition (faults, warnings, etc.) that could generate call without operator intervention. In these situations Machine PLC will hold bit in interface register that will be picked by MES.

Critical process parameters could be send to MES via Int values. (Conveyor present of travel, temperature, pressure, etc.)

Bit and Int interpretation and MES reactions will be specific to every machine and will be finalized during process and controls reviews.

Tag name: ***MES.Call*** – Machine send control calls and values to MES

Elements:

ELEMENT	DESCRIPTION	DATA TYPE
.MID	Machine/Station ID FlexNet Equipment Name	Nvarchar(80)
.Bit[256]	Array of calls	Array of Booleans
.Int[10]	Array of calls	Array of Int (10,0)
.TID	Transaction ID	Int(10,0)
.TDT	Transaction Date Time	DateTime

Functionality:

When any of any Bit is changed or any Int is changed by certain value, TID should be incremented to trigger transaction. Machine could use optional acknowledgement for calls through MES.trig, requires special configuration.

6.7 MES Trigger

In a certain conditions MES could send trigger Bit or Int value to Machine control PLC. For example conveyor hold, redirection of conveyor track, hold Machine production due to high quality defects, confirm machine call, etc. MES will set Bit and Int values and trigger transaction.

Bit and Int interpretation and MES reactions will be specific to every machine and will be finalized during process and controls reviews.

Tag name: ***MES.Trig*** – MES send control triggers and values to Machine

Elements:

ELEMENT	DESCRIPTION	DATA TYPE
.MID	Machine/Station ID FlexNet Equipment Name	Nvarchar(80)
.Bit[256]	Array of calls	Array of Booleans
.Int[10]	Array of calls	Array of Int (10,0)
.TID	Transaction ID	Int(10,0)
.TDT	Transaction Date Time	DateTime

Functionality:

MES will set Bit or Int according to defined conditions and incremented TID to trigger transaction. MES could use optional acknowledgement for triggers through MES.Call transaction.

7 Glossary of Terms and acronyms

MES - Manufacturing Execution System
OEE – Overall Equipment Efficiency
PLC – Programmable Logical Controller
PLM - Product Life Management
VIN – Vehicle Identification Number

8 Appendices

8.1 MES Controls Integration simulation example with RSLogix 5000 for MES.Stat interface

MES_Stat	{...}	{...}		MES_Stat	
MES_Stat.MID	'Mach 1'	{...}		String80	Machine ID
MES_Stat.Status	3		Decimal	SINT	Machine status
MES_Stat.Reason	'Fault 2'	{...}		String20	Reason Classification (Fault, Blocked, Starved, etc)
MES_Stat.WorkCenter	'Work Center 1'	{...}		String40	Work Center
MES_Stat.Operation	'Op 10'	{...}		String20	Operation Code (op10, 20, etc)
MES_Stat.WorkOrder	'Order1'	{...}		String40	Work Order (Optional for batches)
MES_Stat.StartTime	DT#1998-08-15-21:08:44.959236(GMT-08:00)		Date/Time	LINT	Start of same status/reason (for previous event)
MES_Stat.EndTime	DT#1998-08-15-21:09:14.959354(GMT-08:00)		Date/Time	LINT	End of same status/reason (for previous event)
MES_Stat.Speed	10		Decimal	DINT	Process/Conveyor Speed
MES_Stat.PN	'Part1'	{...}		String40	Part Number (Material Number)
MES_Stat.TID	2		Decimal	DINT	Transaction ID
MES_Stat.TDT	DT#1998-08-15-21:09:14.959354(GMT-08:00)		Date/Time	LINT	Transaction Date Time

Figure 2 - MES.Stat data structure

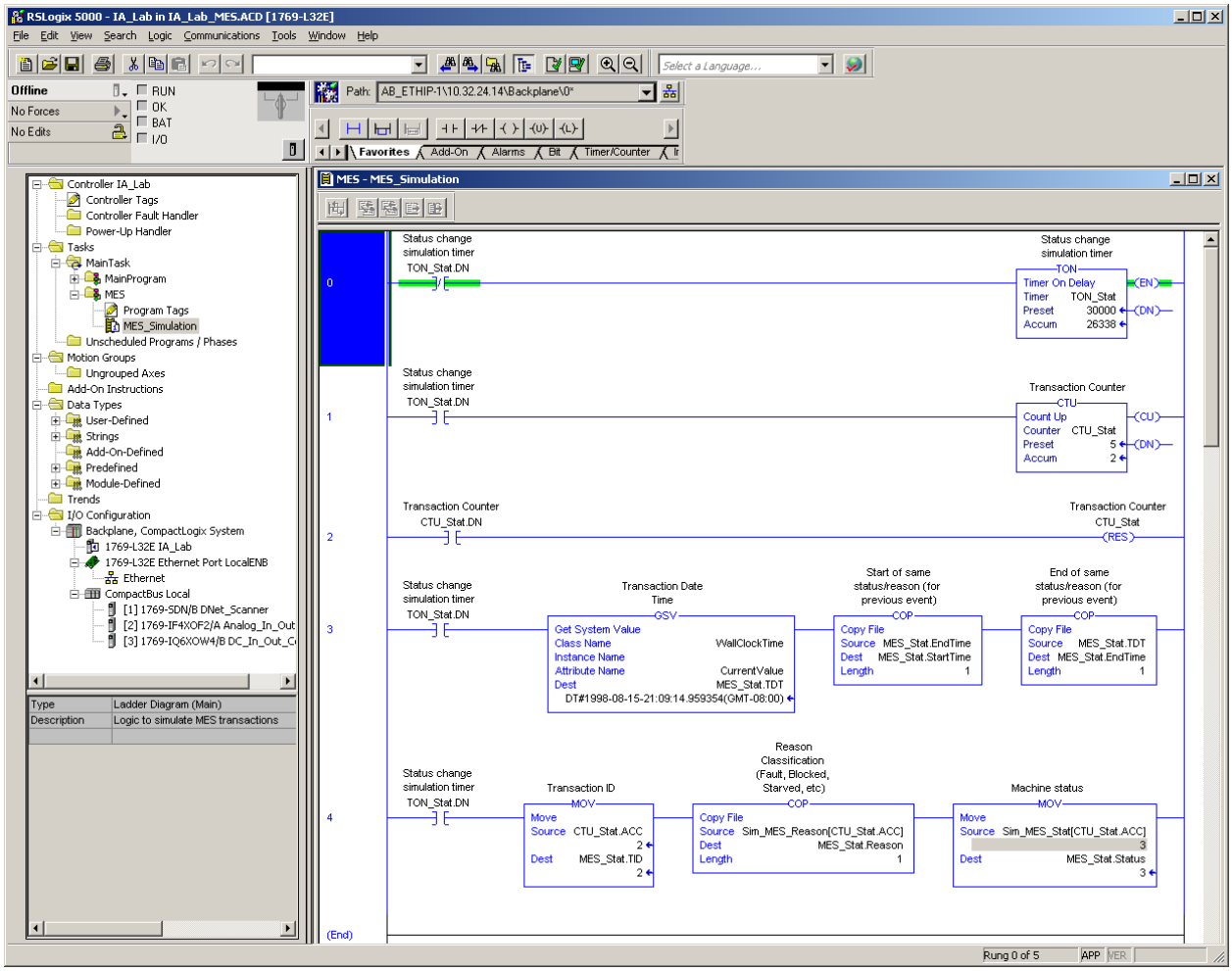

Figure 3 - MES.Stat Simulation program